DIODES INCORPORATED

New Product Announcement

AP61100Q
AP61102Q

Tiny 5.5V, 1A Synchronous Buck COT Converters for High-Efficiency Automotive Point of Load Applications

The AP61100Q and AP61102Q are 1A, automotive-compliant synchronous buck converters with a wide 2.3V to 5.5V input voltage range. They are AEC-Q100 grade 1 qualified to provide high-efficiency step-down DC-DC conversion. Both devices integrate a 110mΩ high-side power MOSFET and an 80mΩ low-side power MOSFET.

The AP61100Q/AP61102Q can be set to operate in either Pulse Width Modulation (PWM) regardless of load for low output voltage ripple or Pulse Frequency Modulation (PFM) with up to 89% efficiency at 5mA light load.

The AP61100Q and AP61102Q both minimize external component count, due to their adoption of Constant On-Time (COT) control enabling them to achieve fast transient response, easy loop stabilization, and low output voltage ripple.

Both devices are available in the SOT563 package.

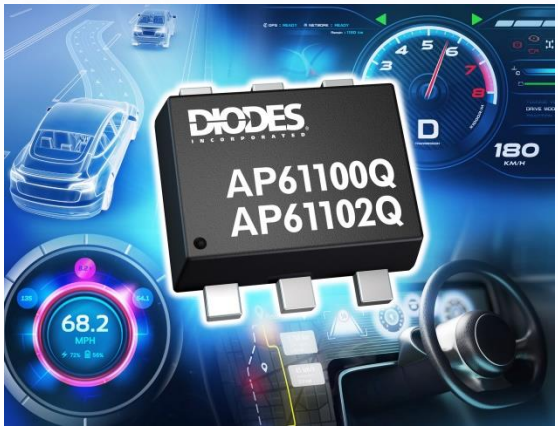

The Diodes Advantage

The AP61100Q and AP61102Q both provide a high efficiency, small foot-print DC-DC buck converter solution for automotive applications.

- **High Efficiency @ Light Loads**
  0.1µA Shutdown Current
  Low 15µA Quiescent Current in PFM Operation
- **High Design Flexibility**
  Wide Input Voltage Range from 2.3V – 5.5V
  Wide Output Voltage Range from 0.6V to 3.6V
  Multifunctional EN Pin to Select PFM or PWM Operation Modes
  Built-in PG with Internal Pull-Up Resistor (AP61102Q)
- **High Robustness**
  Utilizes both High-side and Low-side Current Sense Protection
- **Compact Solution**
  2.2MHz Fsw Allows the Use of Small Passive Components
  COT Control Minimizes External Component Count

Applications

- Automotive 5-V and 3.3-V POL applications
- Automotive Infotainment
- Automotive Clusters
- Automotive Telematics
- Advanced Driver Assistance Systems

New Product Announcement

AP61100Q
AP61102Q

Typical Application Circuit

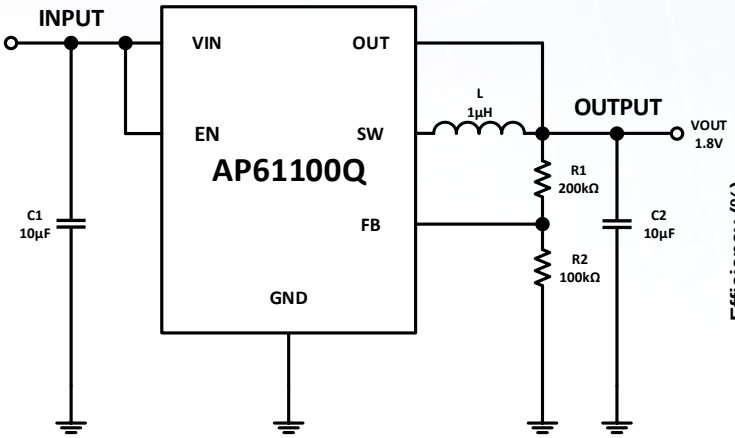

Efficiency vs. Output Current

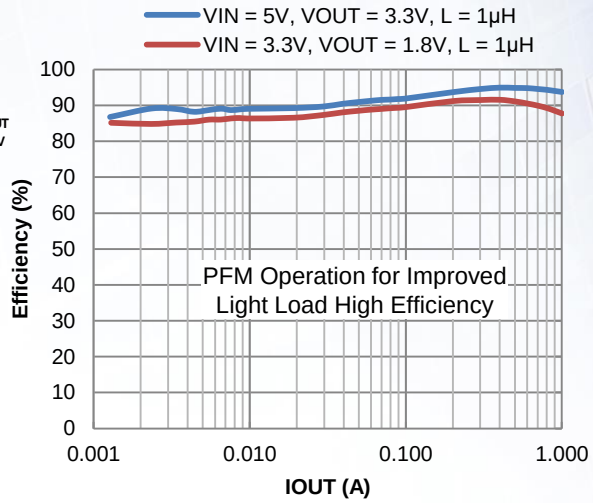

Automotive 5.5V Input DC-DC Buck Converter Portfolio

Part Number	VIN Range (V)	VOUT Range (V)	Output Current (A)	HS / LS $R_{DS(ON)}$ (mΩ)	PWM/ PFM Mode	Switching Frequency (MHz)	I_Q (µA)	PG	Ambient Temperature (°C)	AEC-Q100 Grade	Package
AP61100Q	2.3 to 5.5	0.6 to 3.6	1	110 / 80	Adj by EN	2.2	15	No	-40 to +125	1	SOT563
AP61102Q								Yes			

To find out more information:

https://www.diodes.com/part/AP61100Q
https://www.diodes.com/part/AP61102Q

Ordering Information

Orderable Device	Package Code	Package	Identification Code	Reel Size	Tape Width	Quantity
AP61100QZ6-7	Z6	SOT563	HJQ	7 inches	8 millimeters	3000
AP61102QZ6-7	Z6	SOT563	HKQ	7 inches	8 millimeters	3000