DIODES INCORPORATED

New Product Announcement

AH1925

High Sensitivity Omnipolar Hall Effect Switch Lowers System Cost and Extends Battery Life

The AH1925 is a high sensitivity, ultra-low power Hall Omnipolar Effect switch. When a north or south pole is perpendicular to the surface of the device an open drain output is switched on resulting in a low logic state. Typically this state is achieved as the magnetic flux density exceeds ± 25 gauss and returns to an open state when the field diminishes to ± 20 gauss. Higher sensitivity allows for a more precise determination of a magnet location which translates into mechanical accuracy for an end product. Possible changes of these operating points over the operating temperature range of -40 to 85 ºC are minimized by the use of chopper stabilized circuitry.

The ultra-low power is achieved by a hibernation scheme such that the part is active 0.1% of the time. The active state is 45 µs seconds out of a repetitive period of 45 ms reducing the typical average current to 1.4 µA.

The device is supplied in a small DF1410 package that measures 1.4 mm x 1.0 mm x 0.4 mm.

The DIODES Advantage

AH1925 provides a power-saving and high-sensitivity hall effect switch solution for broad applications; from battery powered home appliances to industrial applications

- **Sensitive Omnipolar Hall Effect Switch**
  - Operates with either a North or South pole
  - High sensitivity : 25 gauss B_{OP}. With 5 gauss hysteresis
- **Designed for portable battery and ultra-low power consumption**
  - Supply voltage designed for battery applications (1.6V to 3.6V)
  - Only 1.4µA @ 1.85V ultra-low average supply current to extend battery life
- **High-performance and reliability**
  - Tight magnetic operating window (less magnetic threshold spread)
  - High ESD voltage rating of 8kV (HBM)
- **Small footprint and low-profile packages**
  - X2-DFN1410-4 is 0.4 mm thick and uses only 1.4 mm² on PCB

Applications

- Smart cover or dock detection for cell phones and tablets
- Medical devices, IoT Systems
- Contact-less switches in home and industrial applications
- Level, proximity and position detection
- E-locks, smoke detectors, home appliances

New Product Announcement

AH1925

Typical Application Schematic

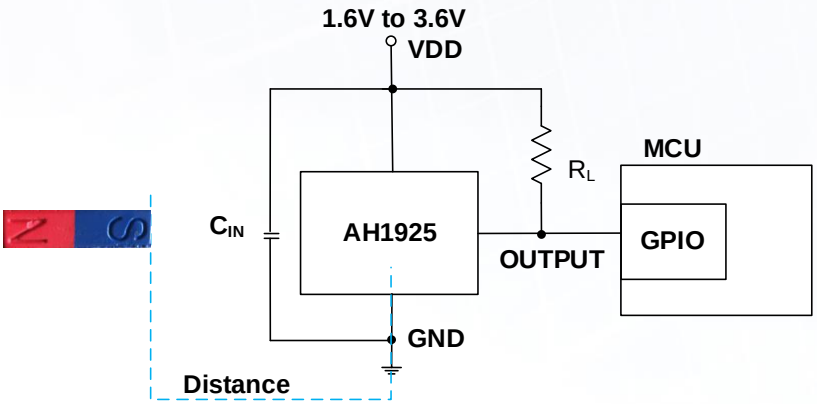

Product Portfolio

Part	Output Type	Operating Voltage (V)	Supply Current (µA)	Chopper Stabilized	ESD (kV)	Operating Point (Bop) (Gauss)	Release Point (Brp) (Gauss)	Temp Range (°C)	Package
AH1925	Open Drain	1.6 to 3.6	1.4	Yes	8	±25	±20	-40 to + 85	X2-DFN1410-4
AH1913	Push Pull	1.6 to 5.5	16*	Yes	6	±18	±11	-40 to + 85	X1-DFN1216-4, SC59
AH1912	Push Pull	1.6 to 5.5	1.6	Yes	6	±30	±23	-40 to + 85	X1-DFN1216-4, SC59
AH1911	Push Pull	1.6 to 5.5	1.6	Yes	6	±60	±45	-40 to + 85	SC59
AH1921	Open Drain	1.6 to 5.5	1.6	Yes	6	±60	±45	-40 to + 85	SC59

**: High magnetic sampling rate for higher supply current, please contact Diodes if you require lower supply current.*

Ordering Information

Part Number	Packaging	Packaging Code	7” Tape and Reel	
			Tape Width	Quantity
AH1925-HK4-7	X2-DFN1410-4	HK4	8mm	4000

Further information:
https://www.diodes.com/part/AH1925