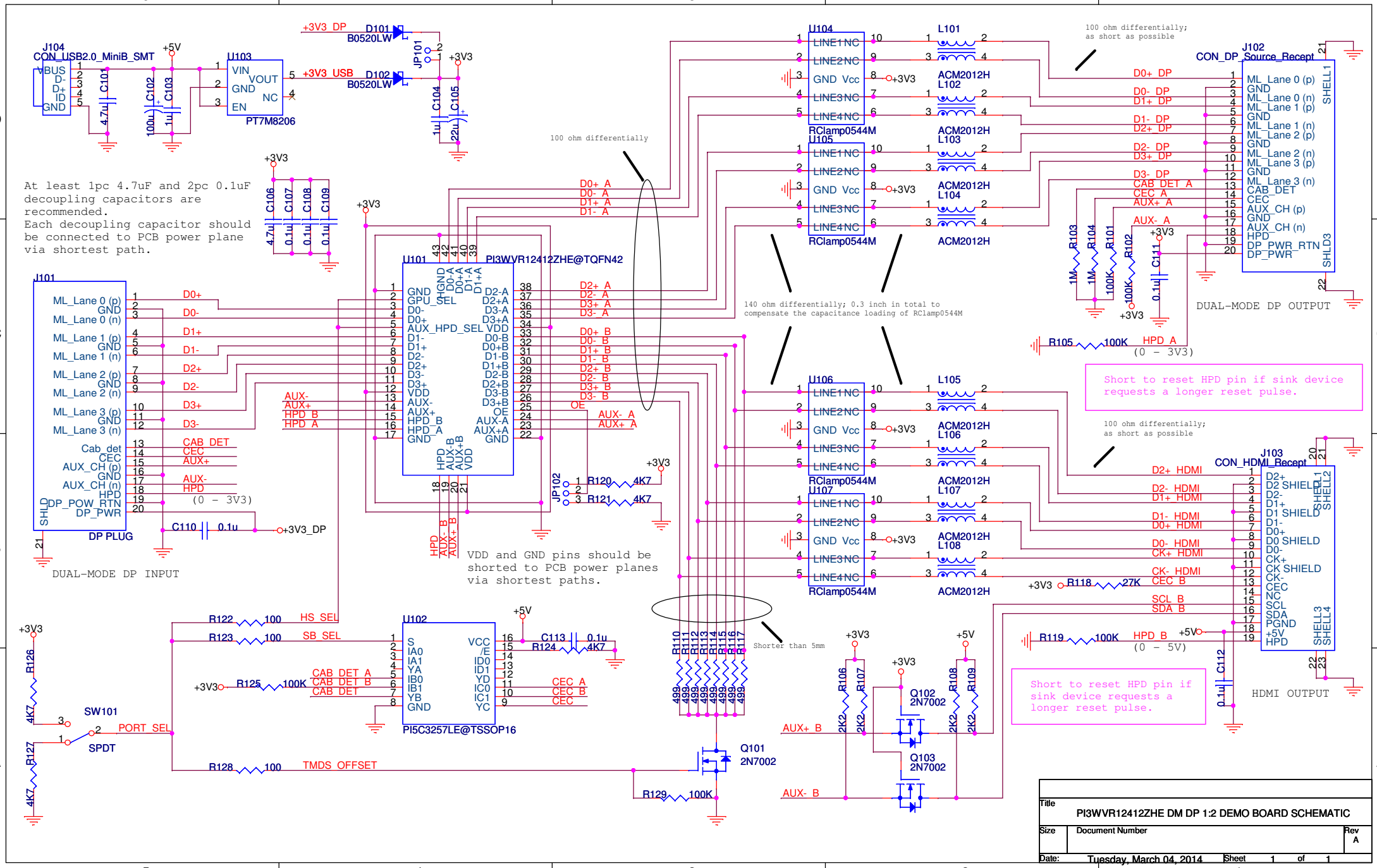

Title	PI3WVR12412ZHE DM DP 1:2 DEMO BOARD SCHEMATIC
Size	Document Number
Rev	A
Date:	Tuesday, March 04, 2014
Sheet	1 of 1