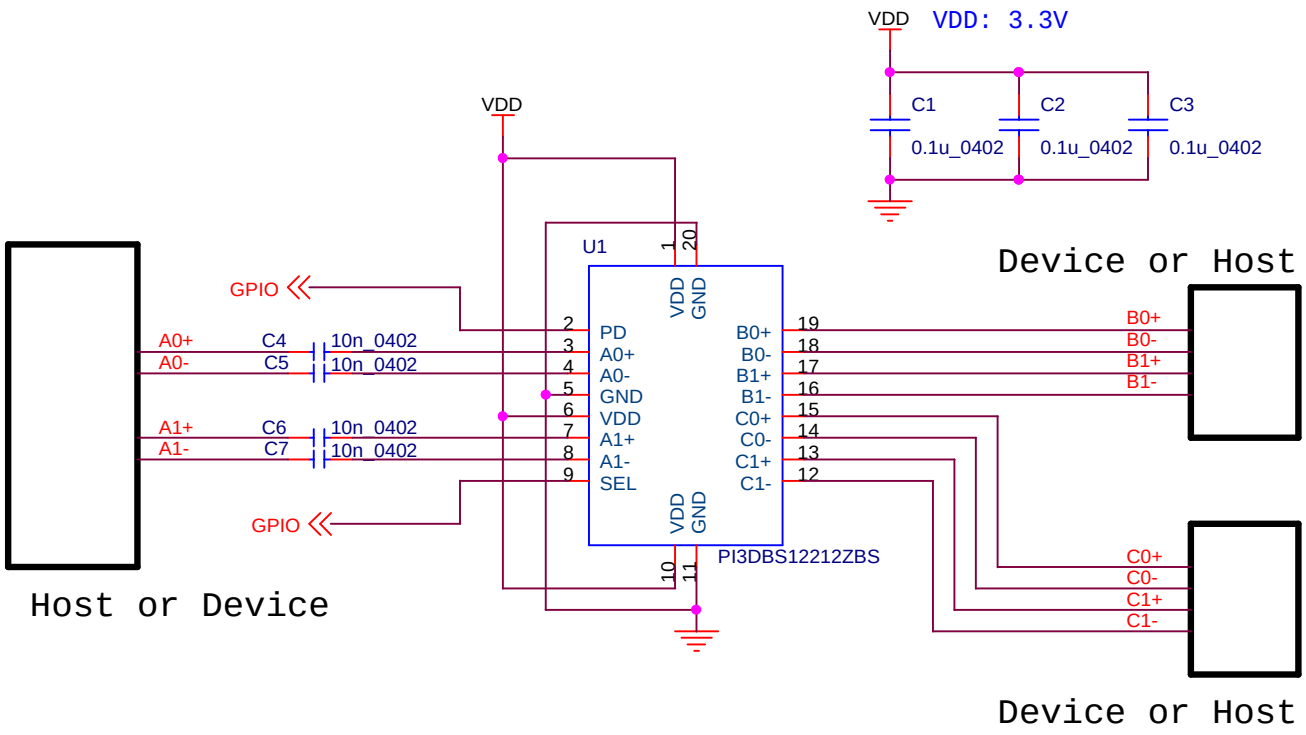

PERICOM Enabling Serial Connectivity	Pericom Semiconductor Corporation	
Size A	Document Name PI3DBS12212ZBS Typical Application Circuit	Rev A
Date: Monday, February 17, 2014	Sheet 1 of 1	