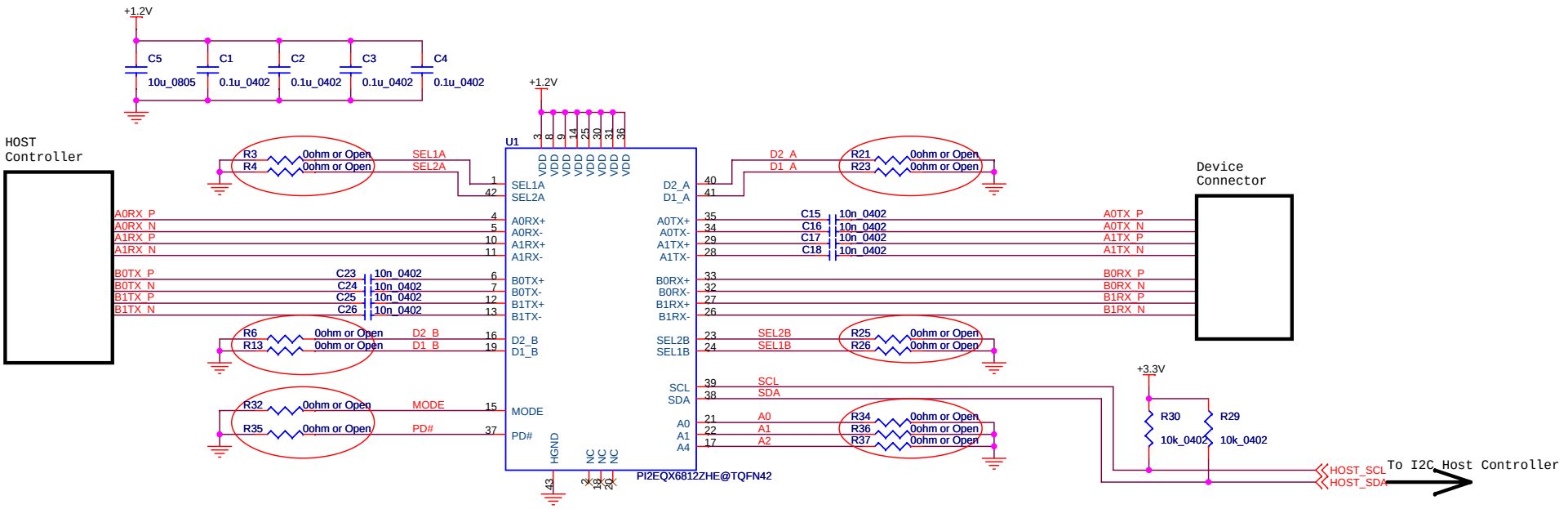

Equalizer, Emphasis and Swing Selection Table

Input Equalizer Selection for Channel x (x is A or B)

SEL2_x	SEL1_x	SEL0_x	@1.5Ghz	@3.0Ghz	Available thru Pins
0	0	0	0.8dB	1.5dB	
0	0	1	**1.0dB**	**1.9dB**	Y
0	1	0	1.5dB	3.2dB	
0	1	1	**2.5dB**	**5.2dB**	Y
1	0	0	3.5dB	6.9dB	
1	0	1	**4.4dB**	**8.3dB**	Y
1	1	0	5.9dB	10.4dB	
1	1	1	**8.7dB**	**13.8dB**	Y

Output De-emphasis Selection for Channel x (x is A or B)

D2_x	D1_x	De-emphasis
0	0	2.5dB
0	1	4.5dB
1	0	6.5dB
1	1	8.5dB

These settings can be selected by:

1, Pin Strapping

2, Byte5,6,11,12 in Register

Output Swing Selection for Channel x (x is A or B)

S1_x	S0_x	Swing(Differential)
0	0	1.1V (Available for pin Strap only)
0	1	0.5V
1	0	0.8V
1	1	1.0V

CONTROL PIN FUNCTION DESCRIPTION

Resistor Configuration for this Schematic

PIN Name	PIN FUNCTION DESCRIPTION	Pin Strapping	I2C Operation
Mode	Input with internal 100K-Ohm pull-up resistor, High or open is Disable I2C Operation and Enable PIN Strapping Function, Low is Enable I2C operation and Disable PIN Strapping Function	R32=Open	R32=0ohm
A0, A1, A4	I2C programmable address bit A0, A1 and A4. With Internal pull-up resistor	R34, R36 and R37=0ohm	For I2C Registor Address Selection
PD#	Input with internal 100K-Ohm pull-up resistor, High or open is Normal operation, Low is Disable the IC	R35=Open	**R** (R35=Open)
SEL1_A&B SEL2_A&B	Input with internal 100K-Ohm pull-up resistor For Input Equalizer Selection of Channel A&B	**P** (R3&R26) (R4&R25)	**R** (R3&R26=Open) (R4&R25=Open)
D1_A&B D2_A&B	Input with internal 100K-Ohm pull-up resistor For Output Emphasis Selection of Channel A&B	**P** (R23&R13) (R21&R6)	**R** (R23&R13=Open) (R21&R6=Open)

Note:
R means the function is controlled by Registor at I2C Operation
P means the function is controlled by Pin at Pin Strapping
- means the same for pin strapping and I2C Operation

Pericom Semiconductor Corporation

Size	Document Name	Rev
B	PI2EQX6812ZHE Typical Application Circuit	A

Date: Friday, February 18, 2011 Sheet 1 of 1