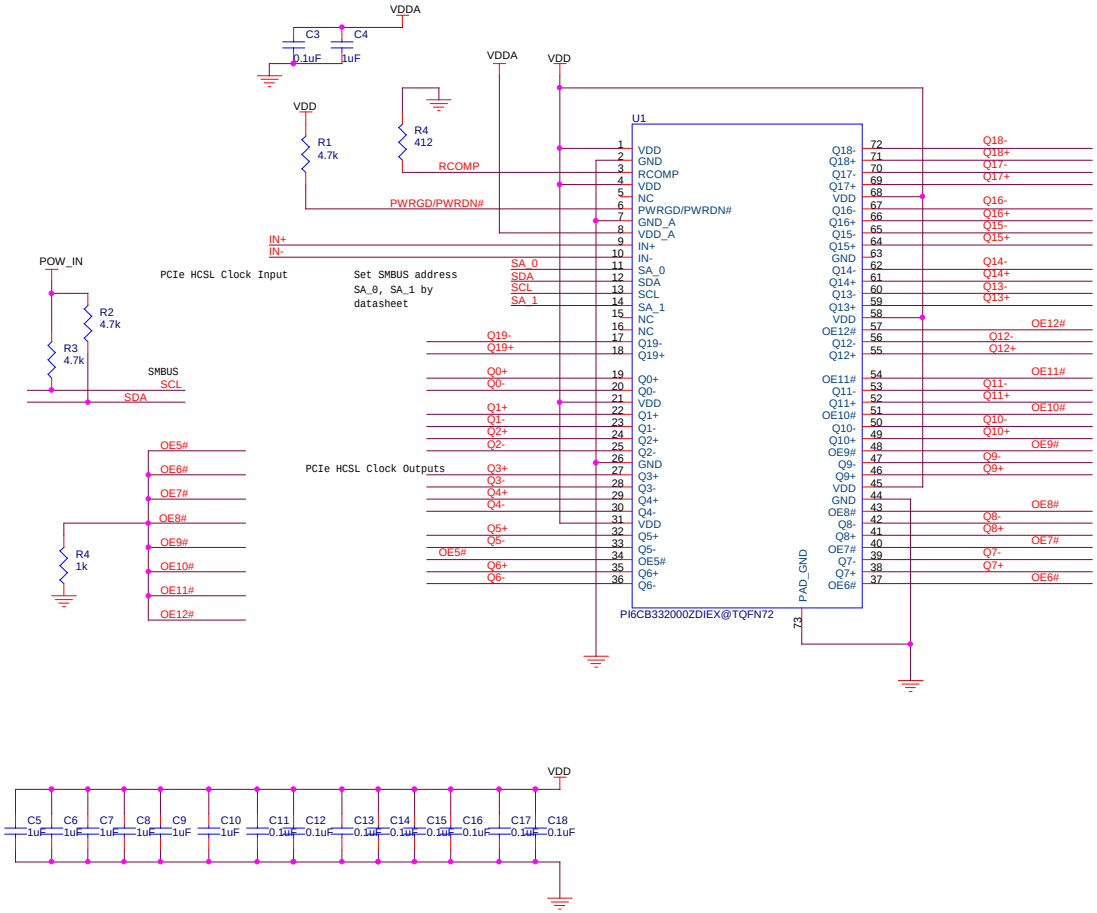

App. Note:

1. Each VDD pin must have 0.1uF decoupling cap. close to pin, add another 1uF for better decouping

2. PWRDN# pin 6 needs pull-up to enable IC, can not be floating

3. OEx needs pull-down to enable output, pull-up is disable output, can not be floating;

4. SA_0, SA_1 SMBUS address be set acording to datasheet

5. The package thermal pad must be connected GND plane in > 16 vias

Title	**PI6CB332000 App. Sch.**	
Size B	Document Number Diodes Inc.	Rev **A**
Date: Tuesday, March 05, 2019	Sheet 1 of 1	