Issue Number | 002
April 2012

DIODES INCORPORATED

New Product Announcement

Lowest Profile DFN2020 Mosfet Portfolio

Diodes Incorporated reduces MOSFET height by 50%

Diodes Incorporated has launched a series of high efficiency N- and P-channel MOSFETs in low profile DFN2020-6 packages. With an off-board height of only 0.4mm and a footprint of 4mm², the DFN2020H4 packaged DMP2039UFDE, a -25V rated P-channel device, is 50% thinner than competing devices and occupies 55% less board space than SOT23. The other MOSFETs in the portfolio are provided in the 0.5mm high DFN2020E package, 20% thinner than the common 0.6mm high alternatives.

Targeted at load switching applications, the DMP2039UFDE also provides circuit designers with 3KV protection against human borne electrostatic discharge. At just 13mΩ at a V_{GS} of 4.5V for the -12V P-channel DMP1022UFDE, the new MOSFETs' low typical $R_{DS(on)}$ means conduction losses can be minimized in battery-charging applications.

The 20V N-channel DMN2013UFDE makes an ideal load switch or high-speed switch in DC/DC buck or boost converters and again offers a high 2KV ESD protection rating. Operating at a V_{DS} of 60V, the DMN6040UFDE is one of the first high voltage MOSFETs to be introduced in the DFN2020 package and suits small form factor industrial and Heating, Ventilation and Air Conditioning (HVAC) controls .

Particularly well suited to ultra slim portable product designs, such as smart phones, tablets and digital cameras, the initial series of nine MOSFETs comprises -12V, -20V, -25V and -40V P-channel and 12V, 20V and 60V N-channel parts.

The Diodes' Advantage

- **Small footprint**
  4mm² footprint – 55% smaller than SOT23
- **Low profile**
  Typical off-board profile of 0.4mm (DFN2020H4) – ideally suited to ultra thin consumer products
- **Thermally efficient package**
  Low junction to ambient thermal resistance (Rthj-a) supports power dissipation upto 1W under continuous conditions
- **Low $R_{DS(ON)}$**
  The DMP1022UFDE features a typical $R_{DS(on)}$ of 13mΩ - minimizing conduction losses and reducing power dissipation

Circuit Functions

- Signal switching
- Load switching
- Boost conversion

Target Markets

- Smart phones
- Tablet PC's
- Headsets
- Thin LED TV
- Heating,Ventalation, Air Conditioning
- Indistrial Controls

Issue Number | 002
April 2012

New Product Announcement

Lowest Profile DFN2020 Mosfet Portfolio

Diodes Incorporated reduces MOSFET height by 50%

Examples of applications that use DFN2020 Mosfet portfolio

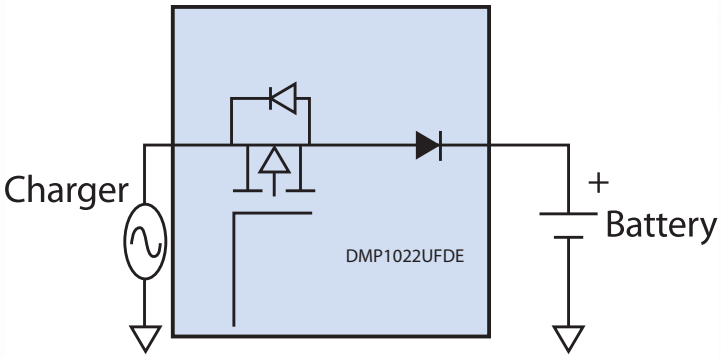

MOSFET used as current source in charger application

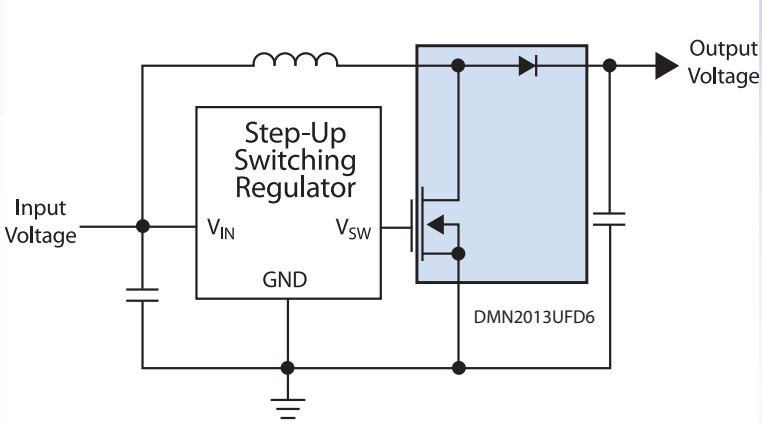

DC/DC Boost converter

DFN2020 MOSFET Portfolio

Parts	Polarity	V_{DS} (V)	V_{gss} (V)	ESD capability	V_{th} (V) (MIN)	$R_{DS(on)}$ (mΩ) @10V	@4.5V	@2.5V	@1.8V	@1.5V	@1.2V	Q_G @4.5V (nc)	Package
DMN1019UFDE	N	12	+/-8	2KV	0.35	---	10	12	14	18	41	27.3	DFN2020E
DMP1022UFDE	P	-12	+/-8	3KV	-0.4	---	16	21.5	26	32	95	28.6	DFN2020E
DMN2015UFDE	N	20	+/-12	800V	0.5	---	11.6	15	30	50	---	19.7	DFN2020E
DMN2013UFDE	N	20	+/-8	2KV	0.5	---	11	13	---	---	---	14.3	DFN2020E
DMP2039UFDE4	P	-25	+/-8	3 KV	-0.4	---	26	33	40	70	---	28.2	DFN2020H4
DMP2039UFDE	P	-25	+/-8	3 KV	-0.4	---	26	33	40	70	---	28.2	DFN2020E
DMP2066UFDE	P	-20	+/-12	300V	-0.4	---	36	56	75	---	---	14.4	DFN2020E
DMP4047UFDE	P	-40	+/-20	NA	1	33	50	---	---	---	---	11.2	DFN2020E
DMN6040UFDE	N	60	+/-20	500V	1	40	55	---	---	---	---	10.4	DFN2020E

Cross Reference

	Vishay	AOS	On Semi	IR	Fairchild
DMN1019UFDE	SIA414DJ	-	-	-	-
DMN2015UFDE	SIA430DJ	AON2403	-	IRLHS6242	FDMA410NZ
DMN2013UFDE	SIA426DJ	AON2403	-	-	-
DMP1022UFDE	SIA447DJ	-	-	-	FDMA905P
DMP2066UFDE	SIA431DJ	-	NTLJS2103P	IRLHS2241	FDMA291P
DMP2039UFDE/4	SIA461DJ	AON2405	NTLSJ2103P	-	FDMA520PZ
DMP4047UFDE	SIA441DJ	AON2407	-	-	-
DMN6040UFDE	-	AON2260	-	-	-