New Product Announcement

AH5798

AH5798 Smart fan driver with internal Hall effect sensor for single phase BLDC fans and motors

Description

The AH5798 is a highly integrated, simple to use, single chip solution for driving single-phase brushless DC (BLDC) fans and motors.

The AH5798 has an integrated Hall effect sensor, bidirectional full bridge driver and features such as Soft-switching driver, Rotor Lock Protection, with rotor lock detection and automatic self-restart.

Rotor Lock Protection helps to prevent damage to the coil when the rotor is locked.
The soft-switching driver allows low noise fan motor operations.

The AH5798 provides open-drain frequency generator (Tachometer) pin, FG, which makes it easier to interface with external hardware for status and speed monitoring purposes. The FG frequency is the magnetic change frequency.

The AH5798 is available in SOT89-5L.

The Diodes advantage

The AH5798 provides highly integrated yet simple low cost effective solution for cooling fans and motor drive applications

- **Built-in Hall sensor and amplifier**
  All-in-one integrated solution significantly reduces external components
- **Integrated bidirectional full bridge driver with soft switching**
  Supports source and sink load current for single phase motor driver operation up to 300mA average load current.
  No external driver components – reduced PCB area
  Soft-switching supports low noise fan and motor operations
- **Lock detection and automatic self-start, without external capacitor**
  Protects coil from over-heating or burn-out during motor/fan rotor lockout
  Automatic restart when rotor lock is released
  Reduces number of external components
- **Low start up supply voltage of 1.8V**
  Supports low voltage applications e.g. Netbook DC fans
- **Wide operating temperature range -40°C to 105°C**
  Suitable for thermally demanding applications

Applications

- **3V / 3.3V / 5V BLDC Cooling Fans**
- **Netbook/ Notebook DC Fans**
- **Low Voltage / Low Power BLDC Motors**

New Product Announcement

AH5798

AH5798 Smart fan driver with internal Hall effect sensor for single phase BLDC fans and motors

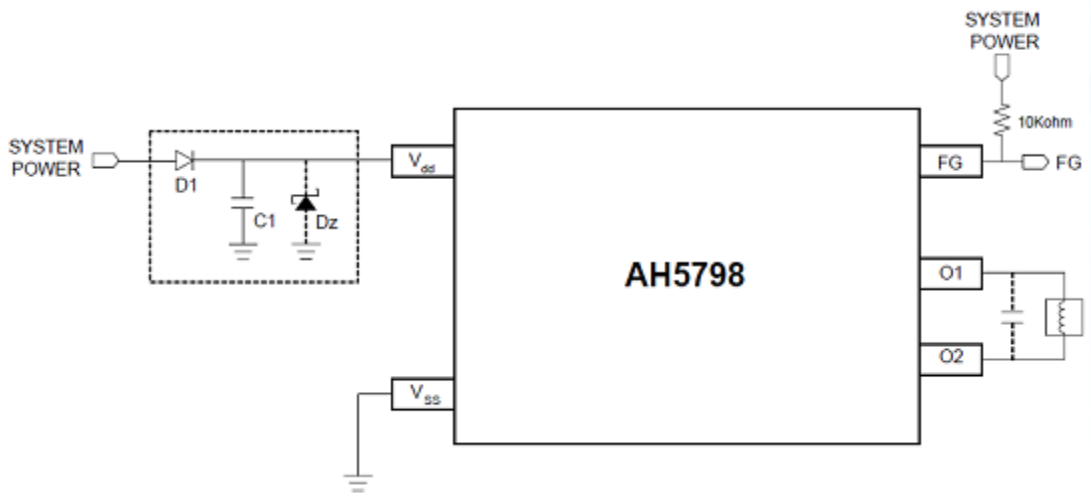

Electrical characteristics

Part Number	Operating Voltage (V)	IC supply current (mA)	Average Output drive current (mA)	Operating Point Bop at 25°C (Gauss)	Release Point Brp at 25°C (Gauss)	Operating Temperature (°C)	Package
AH5798-YG-13	1.8 to 5.5	5	300	10/50	-10/-50	-40 to 105	SOT89-5L

To find out more information:

Product page: http://www.diodes.com/products/catalog/detail.php?item-id=5509
Datasheet: http://www.diodes.com/datasheets/AH5798.pdf

DIODES INCORPORATED

New Product Announcement

AH5798

AH5798 Smart fan driver with internal Hall effect sensor for single phase BLDC fans and motors

Product portfolio

Part Number	Operating Voltage (V)	Average Output current (mA)	Operating Point Bop (Gauss)	Release Point Brp (Gauss)	Operating Temperature (°C)	Package
AH284	3.8 to 20	500	5/60	-5/-60	-40 to 100	SOT89-5L
AH285	3.8 to 20	500	5/60	-5/-60	-40 to 100	SOT89-5L
AH286	3.8 to 20	500	5/60	-5/-60	-40 to 100	SOT89-5L
AH287	3.8 to 28	400	5/60	-5/-60	-40 to 100	SIP4-L SOT89-5L
AH288	3.8 to 28	400	5/60	-5/-60	-40 to 100	SOT89-5L
AH289	3.8 to 28	400	5/60	-5/-60	-40 to 100	SOT89-5L
AH291	1.8 to 5.75	400	5/60	-5/-60	-20 to 100	SIP4-L
AH292	1.8 to 5.75	400	5/60	-5/-60	-20 to 100	SOT89-5L
AH293	1.8 to 5.75	400	5/60	-5/-60	-20 to 100	SOT89-5L
AH2984	3.8 to 20	400	5/60	-5/-60	-40 to 100	SIP4-L
AH5771	2.5 to 15	400	10/50	-10/-50	-40 to 100	SIP4-L
AH5792	1.8 to 5	200 300	5/60	-5/-60	-40 to 100	SOT553 SOT89-5L
AH5798	1.8 to 5.5	300	10/50	-10/-50	-40 to 105	SOT89-5L

Ordering information

Device	Packaging (Note 2)	Part mark	Reel size	Tape width	Quantity
AH5798-YG-13	SOT89-5L	K4 Y W X	13”	12mm	2500

All variants are in packages that are “Green” Molding Compound (No Br, Sb) with Lead Free Finish/RoHS Compliant (Note 1)

Notes: 1. EU Directive 2002/95/EC (RoHS). All applicable RoHS exemptions applied. see *EU Directive 2002/95/EC Annex Notes*. Please visit our website at http://www.diodes.com/products/lead_free.html
2. Pad layout as shown on Diodes Inc. suggested pad layout document AP02001, which can be found on our website at http://www.diodes.com/datasheets/ap02001.pdf

Date coding on part marks: **Y** Year 0~9; **W** A~Z week 1~26 a~z week 27~53; **X** A~Z:Green