DIODES INCORPORATED

New Product Announcement

AP8801

Cost effective medium voltage buck LED driver for 1W LEDs

Description

The AP8801 is a step-down DC/DC converter designed to drive LEDs with a constant current. It has been targeted at cost efficiently driving 1W LEDs and requires only 3 external components.

The device can drive up to 13 LEDs in series from a voltage source of 8V to 48V. Series connection of the LEDs provides identical LED currents resulting in uniform brightness and eliminates the need for ballast resistors.

The AP8801 switches at frequency up to 500kHz. This allows the use of small size external components, hence minimizing the required PCB area

This is just one of Diodes growing family of LED drivers

The Diodes advantage

The AP8801 provides the simplest cost effective solution for driving multiple 1W LEDs

- **Operating voltage range from 8 to 48V**
  Up to thirteen LEDs can be connected in series hence higher output power can be delivered.
- **LED current can be up to 500mA**
  Good match for 1W LED system
- **Soft-start function**
  Reduce stress of LED to allow longer lifetime
- **PWM and DC dimming**
  Provide flexible scheme to users with different dimming methods
- **Up to 500kHz high switching frequency**
  Cost effective and smaller inductor and capacitor can be used
- **Two package choices - MSOP8 and SOP8**
  More choices to suit specific designs

Circuit functions

- Multiple 1W LED driving
- MR16 LED system
- Constant Current Source

DIODES INCORPORATED

New Product Announcement

AP8801

Cost effective medium voltage buck LED driver for 1W LEDs

Typical application circuit

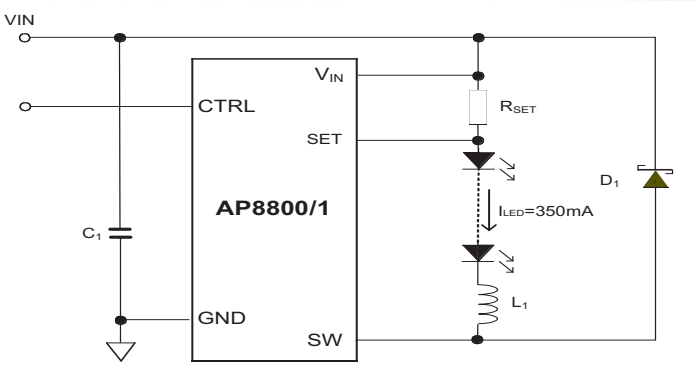

Product portfolio

Diodes P/N	Vin	LED Current	LED Current Accuracy (%	Switching frequency	Dimming function	Soft-Start	Package
AP8800 AP8800MG AP88000FNG	8-28V	Up to 350mA	7	Up to 600kHz	Yes (DC & PWM)	Yes	SOP-8L MSOP-8L DFN3030-10
ZXLD1350ET5TA	6-30V	Up to 370mA	5	Up to 1MHz	Yes (DC & PWM)	Yes	TSOT23-5
ZXLD1352ET5TA	6-30V	Up to 370mA	5	Up to 1MHz	Yes (DC & PWM)	Yes	TSOT23-5
AP8801SG AP8801MG	**8-48V**	**Up to 500mA**	**7**	**Up to 500kHz**	**Yes (DC & PWM)**	**Yes**	**SOP-8L MSOP-8L**
ZXLD1356ET5TA ZXLD1356DACTC	6-60V	Up to 550mA	3	Up to 500kHz	Yes (DC & PWM)	Yes	TSOT23-5 DFN3030-6

To find out more information:

Product page http://www.diodes.com/products/catalog/detail.php?item-id=4996
Datasheet http://www.diodes.com/datasheets/AP8801.pdf

Ordering information

Device	Packaging	Park mark[2]	Reel size	Tape width	Quantity
AP8801SG-13	SOP-8L	AP8801 YYWWXX	13" 330mm	12mm	2500
AP8801M8G-13	MSOP-8L	YWX AP8801	13" 330mm	12mm	2500

All variants are in packages that are "Green" Molding Compound (No Br, Sb) with Lead Free Finish/RoHS Compliant (Note 1)

Notes: 1. EU Directive 2002/95/EC (RoHS). All applicable RoHS exemptions applied, see EU Directive 2002/95/EC Annex Notes.
2 Codes for date coding on part marks

Y	Year 0~9	YY	Year 08, 09 etc
W	A~Z week 1~26 a~z week 27~53	WW	Week 01~52
X	A~Z: Green		