DIODES INCORPORATED

New Product Announcement

AP8802

Cost effective medium voltage buck LED driver for 3W LED

Description

The AP8802 is a step-down DC/DC converter designed to drive LEDs with a constant current. It has been targeted at cost efficiently driving 3W LEDs and requires only 3 external components.

The device can drive up to 13 LEDs in series from a voltage source of 8V to 48V. Series connection of the LEDs provides identical LED currents resulting in uniform brightness and eliminates the need for ballast resistors.

The AP8802 switches at frequency up to 500kHz. This allows the use of small size external components, hence minimizing the required PCB area.

The AP8802 is available in the exposed pad DFN3030-10 and SOP-8L-EP high power dissipating packages enabling them to drive larger numbers of LEDs at increased ambient temperatures.

This is just one of Diodes growing family of LED drivers

The Diodes advantage

The AP8802 provides the simplest cost effective solution for driving multiple 3W LEDs

- **Operating voltage range from 8 to 48V**
  Up to thirteen LEDs can be connected in series hence higher output power can be delivered.
- **LED current can be up to 1A**
  Good match for 3W LED system
- **Soft-start function**
  Reduce stress of LED to allow longer lifetime
- **PWM and DC dimming**
  Provide flexible scheme to users with different dimming methods
- **Up to 500kHz high switching frequency**
  Cost effective and smaller inductor and capacitor can be used
- **High power package – DFN3030-10 & SOP8-EP**
  More choices to suit specific designs

Circuit functions

- Multiple 3W LED driving
- MR16 3W LED systems
- Constant Current Source
- Small LCD panel backlight
- Appliance interior lighting
- Architecture Detail lighting

DIODES INCORPORATED

New Product Announcement

AP8802

Cost effective medium voltage buck LED driver for 3W LED

Typical application circuit

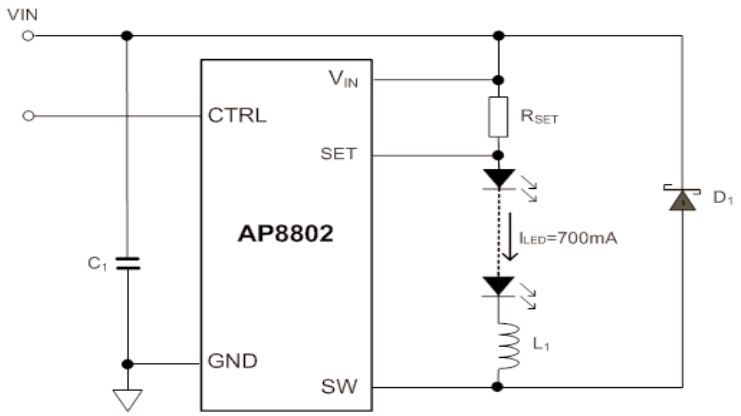

Product portfolio

Diodes P/N	Vin	LED Current	LED Current Accuracy (%	Switching frequency	Dimming function	Soft-Start	Package
ZXLD1360ET5TA	7-30V	Up to 1A	5	Up to 1MHz	Yes (DC & PWM)	Yes	TSOT23-5
AP8802FNG AP8802SG AP8802SPG	**8-48V**	**Up to 1A**	**7**	**Up to 500Khz**	**Yes (DC & PWM)**	**Yes**	**DFN3030-10 SOP-8L SOP-8L-EP**
ZXLD1362ET5TA	6-60V	Up to 1A	5	Up to 500kHz	Yes (DC & PWM)	Yes	TSOT23-5
ZXLD1366ET5TA ZXLD1366DACTC	6-60V	Up to 1A	3	Up to 500kHz	Yes (DC & PWM)	Yes	TSOT23-5 DFN3030-6

To find out more information:

Product page http://www.diodes.com/products/catalog/detail.php?item-id=4997
Datasheet http://www.diodes.com/datasheets/AP8802.pdf

Ordering information

Device	Packaging	Park mark[2]	Reel size	Tape width	Quantity
AP8802FNG-7	DFN3030-10	A5 YWK	7" 180mm	8mm	3000
AP8802SG-13	SOP-8L	AP8802 YYWWXG	13" 330mm	12mm	2500
AP8802SPG-13	SOP-8L-EP	AP8802 YYWWXGE	13" 330mm	12mm	2500

All variants are in packages that are "Green" Molding Compound (No Br, Sb) with Lead Free Finish/RoHS Compliant (Note 1)

Notes: 1. EU Directive 2002/95/EC (RoHS). All applicable RoHS exemptions applied, see EU Directive 2002/95/EC Annex Notes.
2 Codes for date coding on part marks

Y	Year 0~9	YY	Year 08, 09 etc	G	Green
W	A~Z week 1~26 a~z week 27~53	WW	Week 01~52	E	SOP-8L-EP
X	A~Z: Green				