Issue Number | 001
January 2011

New Product Announcement

SBR12U100P5
SBR12U120P5
SBR15U30SP5

DIODES INCORPORATED

Diodes announces expansion of SBR PowerDi-5 product family for SMPS and Solar applications

SBR12U100P5 and SBR12U120P5 are 12A Ultra-low VF rectifiers in a compact PowerDi®-5 package optimized for high thermal performance and power dissipation. The ultra-low VF performance allows for reduced power loss, cooler operations and higher efficiency.

It is designed to be used as a low profile solution to replace standard larger packages for offline AC/DC Switch Mode Power Supplies (SMPS).

SBR15U30SP5 is a 15A version also designed to be used as output rectifiers for SMPS, and additional targeted to be used as bypass diodes for Solar panel application. The low profile height of the PowerDi-5 is targeted for next generation solar with bypass diodes mounted directly under the glass.

Combining both products expand the total SBR PowerDi®-5 portfolio to offer a full range of high efficiency rectifiers in the smallest form factor.

The Diodes' Advantage

- **Ultra low forward voltage (V_F)**
  Provides better efficiency and cooler operation to the device
- **Lower Profile Package Height**
  PowerDi-5 footprint occupies only 45% compared to SMC package, along with a package height of less than 1.1mm. The smaller footprint and profile will provide reduced PCB board for flexibility in placement and reduced cost.
- **High forward current rating (I_{FSM})**
  A high forward surge current rating protects against poor AC line input current, large current surges and lighting strikes.
- **"Green" Antimony and Bromine-free mold compound**
  Continual commitment of manufacturing environmental friendly products.

Issue Number | 001
January 2011

New Product Announcement

SBR12U100P5
SBR12U120P5
SBR15U30SP5

DIODES INCORPORATED

Diodes announces expansion of SBR PowerDi-5 product family for SMPS and Solar applications

Product Summary

New SBR Products						
Part No.	Description	Package	Max T_J	V_F @ rated current 25°C, Max	I_R @ rated voltage 25°C, Max	Samples Availability
SBR12U100P5	12.0 Amperes / 100 Volts, Ultra-Low VF SBR	PowerDi-5	150C	0.73V	0.4mA	Available Now!
SBR12U120P5	12.0 Amperes / 120 Volts, Ultra-Low VF SBR	PowerDi-5	150C	0.82V	0.4mA	Available Now!
SBR15U30SP5	15.0 Amperes / 30 Volts, Ultra-Low VF SBR	PowerDi-5	200C*	0.49V	1.0mA	Available Now!

* Selectively Rated

Application Circuit

(1) Output Rectifiers (SMPS)

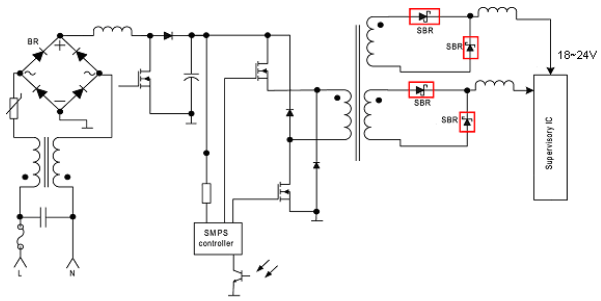

(2)Bypass Diodes (Solar Panel)

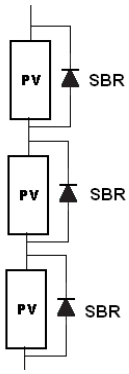

Circuit Function

- Output Diode
- Freewheeling Diode
- Bypass Diode

Applications

- AC/DC power supplies
- DC/DC converters
- Solar Panels

Competitor Cross Reference

Part number cross reference	
Competitor Part Number	Diodes Inc. Equivalent Part Number
Vishay V12P10	SBR12U100P5
Vishay V12P12	SBR12U120P5
Vishay V15P3S	SBR15U30SP5