Issue Number | 001
3 March 2010

DIODES INCORPORATED

New Product Announcement

First Bipolar Transistors in PowerDI®5 give 47% space saving over SOT223

In introducing this new series of devices, Diodes Incorporated has combined its 5th generation matrix emitter process platform with the space saving attributes of the PowerDI5 package to further enhance its market leading, high performance portfolio of Bipolar transistors.

With a package footprint 47% smaller than the SOT223 and 60% smaller than DPAK (TO252) these new transistors offer a significant benefit for space constrained applications. The PowerDI5 also has the additional benefit of its low profile of just 1.1mm ideally suited for applications with component height restrictions.

The initial product offering covers high voltage, low saturation voltage transistors for efficient switching in telecoms DC-DC converter circuits, mid-voltage, low saturation transistors for motor drive applications and devices suitable for linear applications for example telecoms line drivers and battery charging.

Further devices will be added to the portfolio in the near future as we look to exploit the excellent power density the PowerDI5 package brings when used in conjunction with the superior electrical performance of our 5th generation process.

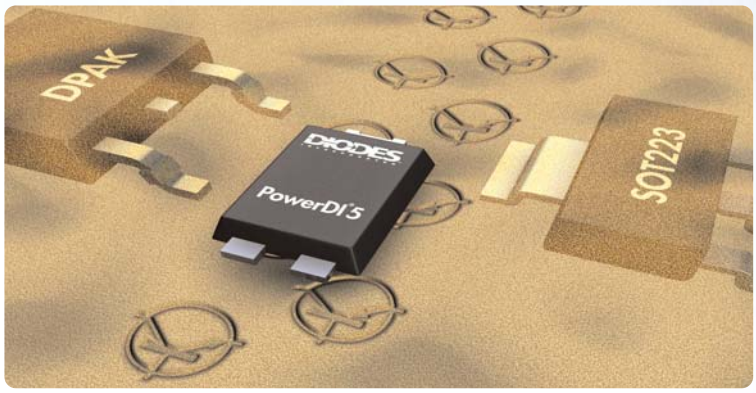

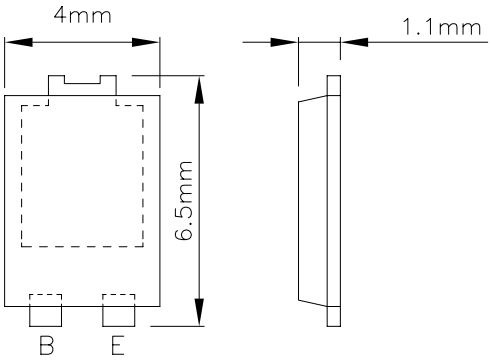

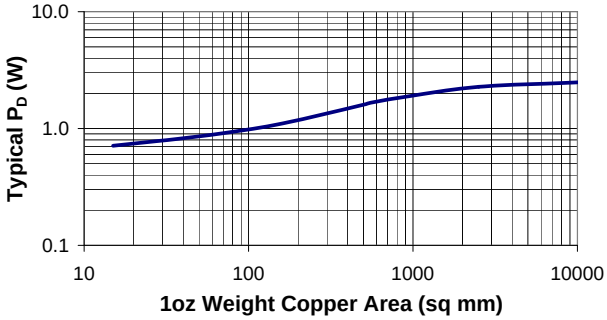

Diodes PowerDI®5 Advantage

- **Reduced footprint on PCB**
  43% smaller than SOT223; 60% smaller than DPAK (TO252)
- **Low profile package**
  Ideal for use in height restricted designs
- **Excellent thermal performance**
  Can replace SOT223 in applications dependant on the thermal performance of the package
- **Minimum copper power rating of 0.74W**
  Excellent thermal performance from small area giving improved power density

DIODES INCORPORATED

New Product Announcement

Application examples

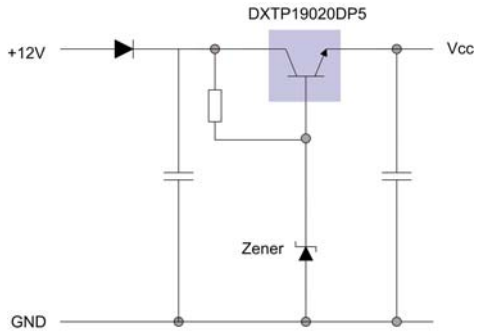

Linear battery charger

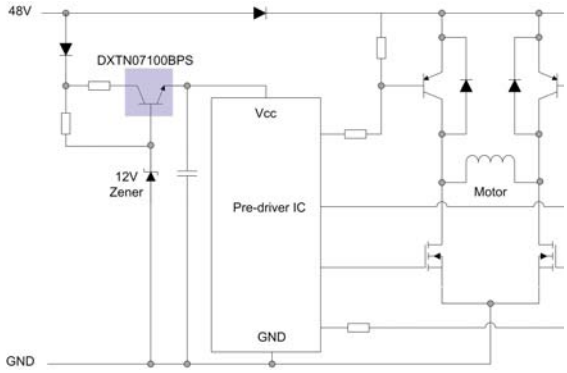

48V regulator

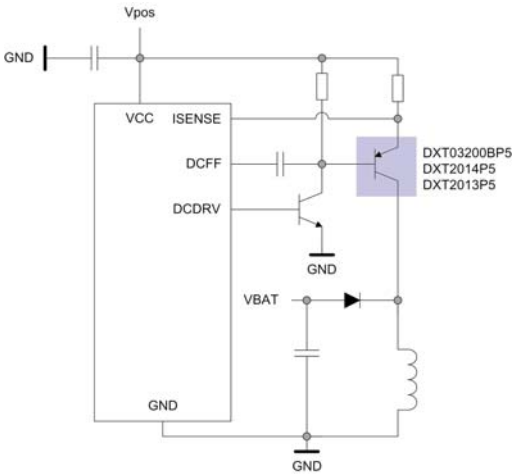

SLIC DC-DC converter

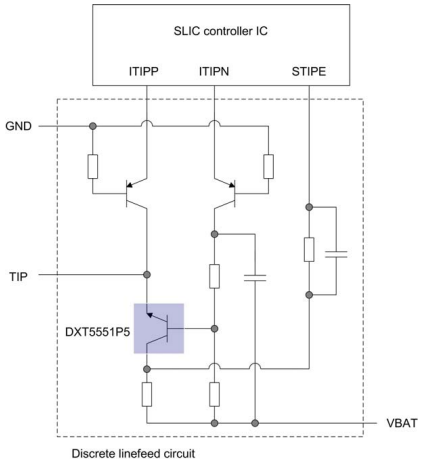

Telecom line driver

Initial portfolio

Device Type	Part No	V_{CEO} V	I_C A	I_{CM} A	P_D W	h_{FE} min	@ I_C A	$V_{CE(sat)}$ Max mV	@ I_C/I_B A / mA	f_T MHz	Application
NPN	DXT690BP5	45	3	6	3.2	400	2	360	1 / 5	150	LED drive, Motor Drive
	DXT2010P5	60	6	30	3.2	100	2	70	1 / 50	130	Motor Drive, Regular circuit
	DXTN07100BP5	100	2	6	3.2	25	2	300	1 / 100	140	Regular circuit
	DXT2011P5	100	6	10	3.2	100	2	65	1 / 100	130	Motor Drive, Regular circuit
	DXT5551P5	160	0.6	-	2.25	30	0.05	200	0.05 / 5	130	Telecom line driver
	DXT458P5	400	0.3	1	2.8	100	0.05	200	0.05 / 6	50	PSU start up, Telecom switch
PNP	DXTP19020DP5	-20	-8	-15	3.2	200	-2	-130	-1 / -10	176	Load switch,Battery charging
	DXT790AP5	-40	-3	-6	3.2	200	-1	-350	-1 / -10	100	Load Switch, Motor Drive
	DXT2012P5	-60	-5.5	-15	3.2	100	-2	-70	-1 / -100	120	Motor Drive, Regular circuit
	DXT2013P5	-100	-5	-10	3.2	100	-1	-90	-1 / -100	125	SLIC DC-DC converter
	DXT2014P5	-140	-4	-10	3.2	100	-1	-120	-1 / -100	120	SLIC DC-DC converter
	DXTP03200BP5	-200	-2	-5	3.2	100	-1	-160	-1 / -100	105	SLIC DC-DC converter