New Product Announcement

ZNBG4003

ZNBG4003 – Four stage GaAs FET bias IC for LNB and LNA applications

Description

The ZNBG4003 is a simple low cost four stage depletion mode FET bias controller intended primarily for satellite Low Noise Blocks (LNBs).

It is also suitable for other Low Noise Amplifier (LNA) applications such as those in found in PMRs and microwave links.

The ZNBG4003 provides each FET with a negative gate voltage and positive drain voltage with user programmable drain current.

Packaged in a 16 pin QFN package, it provides a small but simple solution to LNA biasing.

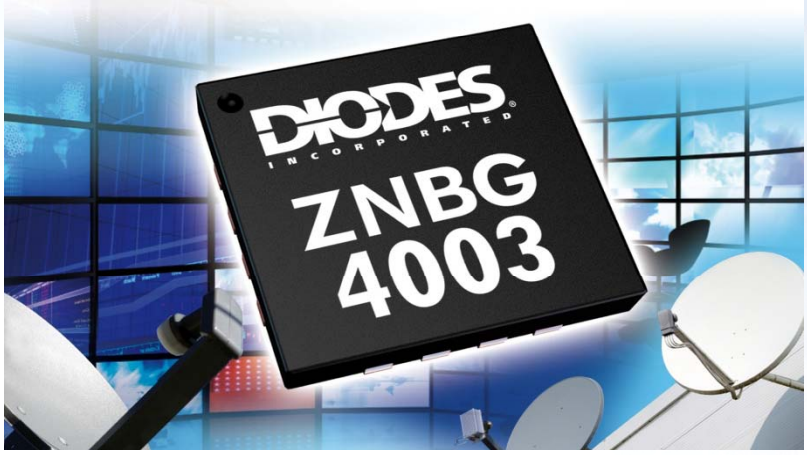

The Diodes advantage

This simple but cost effective bias controller provides a small and flexible solution while offering the main performance and protection benefits for standard LNB designs.

- **GaAs FET LNA bias**
  - Provides up to four independent bias stages for GaAs FET LNAs
  - Dynamic FET protection and temperature compensation
  - User programmable drain current of 0-15mA
- **Optimized for standard LNB designs**
  - Operates from 4.75V to 8V rails allowing for standard LNB architecture.
  - Low current operation
  - Designed to be cost effective
  - Optimized to be paired with the ZNBG3118 for 2 single type twin LNBs
- **Small and flexible solution**
  - Minimal applications circuit while allowing flexibility
  - Packaged in the small 3x3mm QFN package for minimal PCB space

Application Areas

- **2 Single type twin LNBs**
- **Twin LNB's**
- **Quad LNB's**
- **PMR**
- **Microwave links**
- **General high frequency communications**

New Product Announcement

ZABG4002

ZNBG4003 – Four stage GaAs FET bias IC for LNB and LNA applications

Two single twin universal LNB system diagram

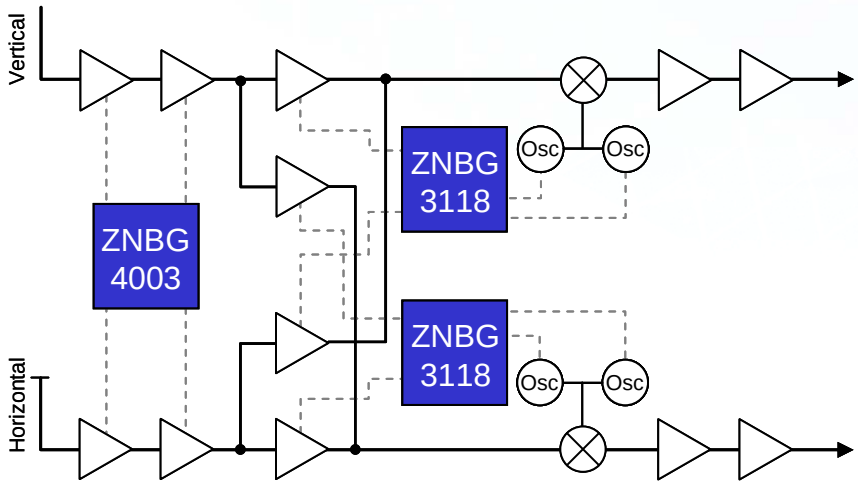

Key Parameters

	Bias Stages					Power and Protection		
Part Number	LNA Fixed	Mixer Bias	FET Off	LNA Drain Current (mA)	Mixer Drain Current (mA)	Vcc (V)	Icc (mA)	FET Protection
ZNBG4003JA16TC	4	0	-2.5V Gate	0 to 15	NA	4.75V to 8V	2	Yes

To find out more information:

- Datasheet: http://www.diodes.com/datasheets/ZNBG4003.pdf
- Product page: http://www.diodes.com/products/catalog/detail.php?item-id=6686&popup=datasheet
- DBS page: http://www.diodes.com/DBS

Ordering information

Order Code	Package	Reel Size (Inches)	Tape Width (mm)	Quantity per Reel
ZNBG4003JA16TC	QFN1633	13	8	3,000