NPA Number 001
September 2011

DIODES INCORPORATED

New Product Announcement

AP6502 / 03

340kHz 23V 2A/3A SYNCHRONOUS DC/DC BUCK CONVERTER

- The AP6502 and AP6503 are 340kHz switching frequency external compensated synchronous DCDC buck converters.
- Incorporating integrated low $R_{DS(ON)}$ high and low side MOSFETs.
- The AP6503 enables continues load current of up to 3A (AP6502 2A) with efficiency as high as 95%.
- Both devices feature current mode control operation, which enables fast transient response times and easy loop stabilization.
- AP6502 and AP6503 simplify board layout and reduces space requirements making it ideal for distributed power architectures.
- The AP6502 and AP6503 are available in a standard Green SO-8EP package with exposed PAD for improved thermal performance

The Diodes Advantage

- **Synchronous DCDC Buck converter with continues load current of 2A and 3A**
  - Increases efficiency
  - Standard industrial pinout
- **Protection**
  - **Over Current Protection**
  - **Thermal Shutdown**

  Improve robustness of circuit and prevents pre-mature failure
- **Standard packages with SO8-EP**
  - **With external heat slab**

Applications

- **Gaming Consoles**
- **TV sets and Monitors**
- **Set Top Boxes**
- **Network Systems**
- **Distributed power systems**
- **Home Audio**
- **Consumer electronics**
- **Green Electronics**

New Product Announcement

AP6502 / 03

340kHz 23V 2A/3A SYNCHRONOUS DC/DC BUCK CONVERTER

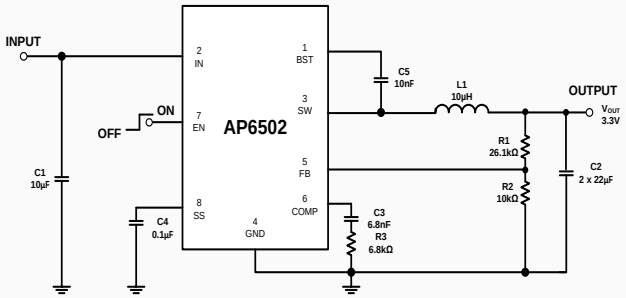

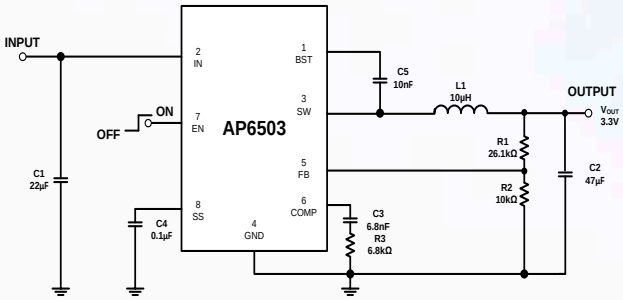

Product portfolio

Part #	Min. Input Voltage (V)	Max. Input Voltage (V)	Output Voltage (V)	Output Current (A)	Frequency (kHz) typ	Internal Vref (V) typ	Efficiency (%)	Standby Quiescent Current (uA) typ	Operating Ambient Temp Range (°C)	Features						Available Packages
										Enable Pin	Current Limit Protection	Thermal Shutdown	Adjustable Output Voltage	Under Voltage Lockout	Programable Softstart	
AP6502	4.75	23	0.925 to 20	2.0	340	0.925	95	10	-40 to +85	X	X	X	X	X	X	SO8-EP
AP6503	4.75	23	0.925 to 20	3.0	340	0.925	95	10	-40 to +85	X	X	X	X	X	X	SO8-EP

Ordering information

Device	Packaging	Reel Size	Tape Width	Quantity
AP6502SP-13	SO8-EP	13"	12mm	2500
AP6503SP-13	SO8-EP	13"	12mm	2500

To find out more information:

Datasheet http://www.diodes.com/datasheets/AP6502.pdf
http://www.diodes.com/datasheets/AP6503.pdf