Issue Number | 001
April 2012

DIODES INCORPORATED

New Product Announcement

AH5794

AH5794 Small, Simple and Cost-Effective All-In-One Fan and Motor Drive IC

The AH5794 is a small, simple and cost-effective single chip fan driver solution with an average output current capability of up to 500mA.

Designed for driving single-coil Brushless Direct Current (BLDC) fans and motors, the integrated full-bridge output stage uses soft switching to minimize audible switching noise and Electromagnetic Interference (EMI) providing a low noise solution.

Although a basic fan and motor driver, the simple to use AH5794 allows speed control by varying the supply voltage.

In todays motors, protection is critical. To help protect the motor coil the AH5794 provides Rotor Lock protection and auto re-start. Over temperature shutdown is also provided for thermal protection.

The open-drain Frequency Generator (FG) pin allows an external interface to monitor motor rotation or speed.

The AH5794 is available in space saving low profile U-DFN2020C-6 and TSOT26 package.

The Diodes Advantage

The AH5794 provides a highly integrated, high performance yet simple and cost effective solution for cooling fans and motor drive applications

- **Built-in Hall sensor, amplifier and bidirectional full bridge driver**
  - No external Hall sensor or driver components needed
  - Supports single phase BLDC motor currents up to 500mA average
  - All-in-one integrated solution significantly reduces external components, PCB area and placement cost
- **Soft switching for low noise**
  - Soft-switching helps to provide low noise fan and motor operation
- **Lock detect and automatic restart, without an external capacitor**
  - Protects coil from over-heating or burning out
  - Reduces number of external components
- **Wide operating temperature range -40°C to 105°C**
  - Suitable for thermally demanding applications
- **Small packaging**
  - The very small profile U-DFN2020C-6 solution is less than half the area of the TSOT26

Applications

- **3V / 3.3V / 5V BLDC motors and cooling**
- **Netbook/ notebook/ desktop PC/video projectors BLDC fans**

Issue Number | 001
April 2012

DIODES INCORPORATED

New Product Announcement

AH5794

AH5794 Small, Simple and Cost-Effective All-In-One Fan and Motor Drive IC

Typical Application Circuit

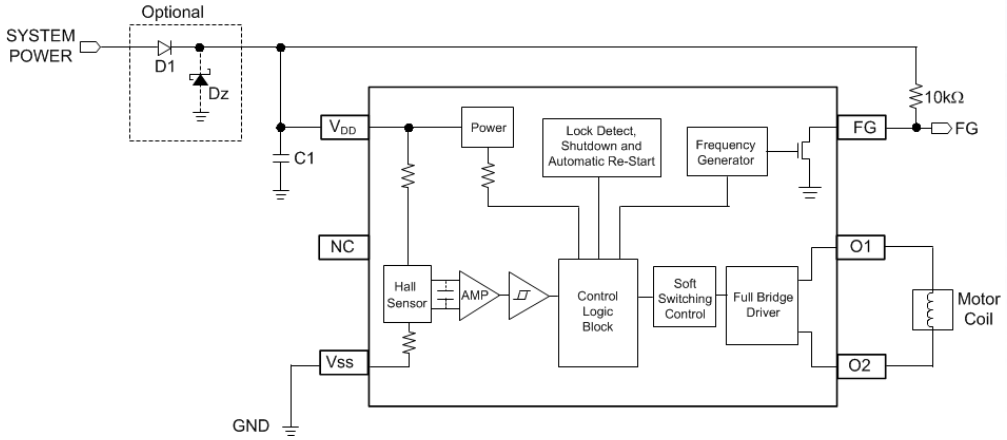

Electrical Characteristics

Part Number	Operating Voltage (V)	IC supply current (mA)	Average Output drive current (mA)	Operating Point Bop at 25°C (Gauss)	Release Point Brp at 25°C (Gauss)	Operating Temperature (°C)	Package
AH5794-FDC-7	1.8 to 6.0	3	500	10/50	-50/-10	-40 to 105	U-DFN2020C-6
AH5794-WU-7	1.8 to 6.0	3	350	10/50	-50/-10	-40 to 105	TSOT26

Ordering Information

Device	Packaging (Note 1 and 2)	Part mark	Reel size	Tape width	Quantity
AH5794-FDC-7	U-DFN2020C-6	J4 Y W X	7”	8mm	3000
AH5794-WU-7	TSOT26	J4 Y W X	7”	8mm	3000

Notes: 1. U-DFN2020C-6 and TSOT26 are in “Green” and with Lead Free Finish/RoHS Compliant packages.
EU Directive 2002/95/EC (RoHS) & 2011/65/EU (RoHS 2) compliant. No purposely added lead. Halogen and Antimony free.
Please visit our website at http://www.diodes.com/products/lead_free.html

2. Pad layout as shown on Diodes Inc. suggested pad layout document AP02001,
which can be found on our website at http://www.diodes.com/datasheets/ap02001.pdf

Issue Number | 001
April 2012

DIODES INCORPORATED

New Product Announcement

AH5794

AH5794 Small, Simple and Cost-Effective All-In-One Fan and Motor Drive IC

Product Portfolio – Single phase (1) BLDC fans and motor drivers All-In-One ICs

Part Number	Operating Voltage (V)	Average Output current (mA)	Speed Control	Operating Point Bop Min/Max (Gauss)	Release Point Brp Min/Max (Gauss)	Operating Temperature (°C)	Package
AH5771	2.5 to 15	400	V_{DD}	10/50	-50/-10	-40 to 100	SIP4-L
AH5772(2)	3V to 20V	400	V_{DD}	10/55	-55/-10	-40 to 105	SIP4
AH5773(2)	3V to 20V	500	V_{DD}	10/55	-55/-10	-40 to 105	U-DFN2020C-6 MSOP8-EP
AH5792	1.8 to 5	200 300	V_{DD}	5/60	-60/-5	-40 to 100	SOT553 SOT89-5L
AH5798	1.8 to 5.5	300	V_{DD}	10/50	-50/-10	-40 to 105	SOT89-5L
		250					TSOT25
AH5795	1.8 to 6.0	500	V_{DD} or PWM	10/50	-50/-10	-40 to 105	DFN2020C-6
		350					TSOT26
AH5794	**1.8 to 6.0**	**500**	**V_{DD}**	**10/50**	**-50/-10**	**-40 to 105**	**U-DFN2020C-6**
		350					**TSOT26**

(1) For two phase All-In-One BLDC fans and motor drivers please refer to the motor drive portfolio page on the web –link provided below
(2) Advance information: Please contact Diodes for product update and availability

To find out more information:

Motor Driver Portfolio page: http://www.diodes.com/products/catalog/list.php?parent-id=117
Datasheet: http://www.diodes.com/datasheets/AH5794.pdf