Issue Number | 001
07 January 2010

DIODES INCORPORATED

New Product Announcement

MMBD5004BRM

MMBD5004BRM – High Voltage Bridge-Configurable Diode Array

The MMBD5004 quad diode, implemented as a bridge, allows ease of interface to the tip/ring lines of standard telephone systems. It complies with the FCC (telco) requirement that the tip/ring voltage polarity isn't defined at the consumer premise equipment (CPE).

The high voltage rating provides adequate margin over the maximum ringing voltage, as well as line transient tolerance, while the miniature form factor packaging helps enable cost and space savings in DSL and analog MODEMs, answering machines and caller ID systems.

The product has a high breakdown voltage rating (400V) which provides excellent tolerance of line transients and allows high operating voltages.

The product's high current rating (225mA continuous / 625mA peak) allows a wide margin for typical DAA MODEM requirements and useful operating capability for footprint constrained and general light duty rectification applications.

Diodes' cost-effective SOT-26 package provides a small PC board area footprint and the four switching diode elements within the device provide a full wave bridge rectifier implementation.

The MMBD5004BRM is a much smaller quad diode implementation than existing solutions, in a cost effective small outline package. It is useful for applications where cost and size are critical factors.

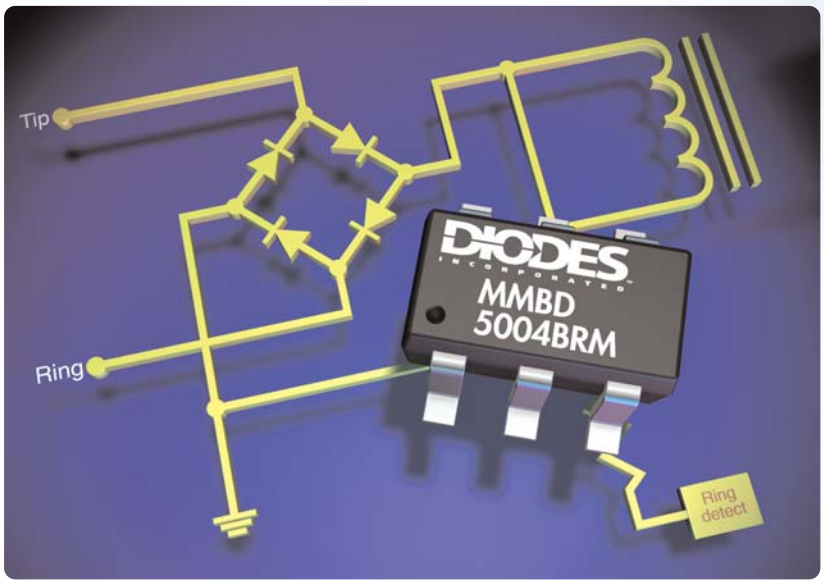

Description

The MMBD5004BRM offers a miniature, cost effective solution and is ideally suited to many signal routing and rectification duties, DAA MODEMS being an example.

- Two Series Diode Circuits Connect to Form Full Wave Bridge
- Fast switching speed
- Low Capacitance
- 400V reverse breakdown voltage rating
- Lead free/RoHs compliant
- Green device (See Diodes.com for further details)

Applications

- DSL/Analog MODEMS
- Caller ID sytems
- Answering machines

DIODES INCORPORATED

New Product Announcement

MMBD5004BRM

MMBD5004BRM – High Voltage Bridge-Configurable Diode Array

Product Overview

Part Number	Power rating (mW)	Total capacitance C_T (pF)	Peak repetitive reverse voltage V_{RRM} (V)	Reverse recovery Time t_{rr} (ns)	Max average rectifier current I_O (mA)	Max peak forward surge current I_{FSM} (A)	Forward Voltage drop V_F (V)	Max reverse current I_R (µA)
MMBD5004BRM	350	2	400	50	225	4	1.25	0.1

Application examples

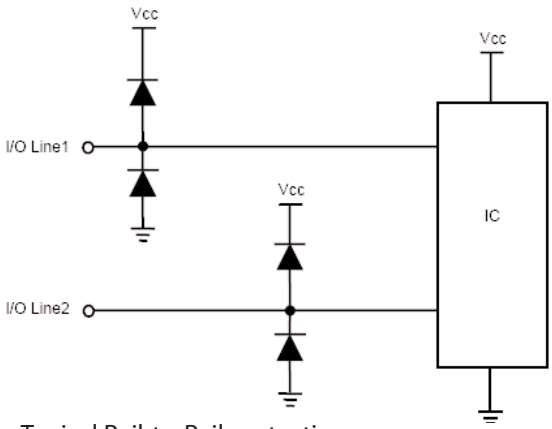

Fig 1 - Typical Rail-to-Rail protection

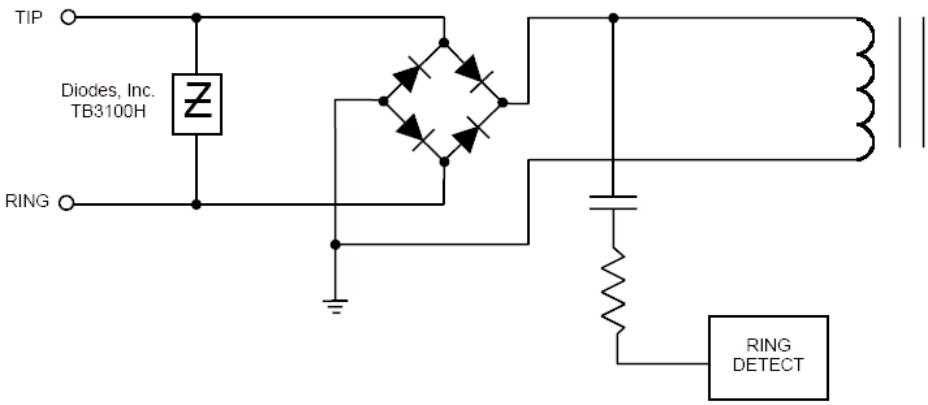

Fig 2 - Typical transformer Coupled Tip and Ring interface

To find out more information:

Product page www.diodes.com/products/catalog/detail.php?item-id=5523&popup=datasheet
Datasheet: www.diodes.com/datasheets/ds30714.pdf