New Product Announcement

July 20, 2005

Announcing Expansions to Our Industry-Leading Schottky Barrier Rectifier Series in Our *New* PowerDI™5 Compact Power Package

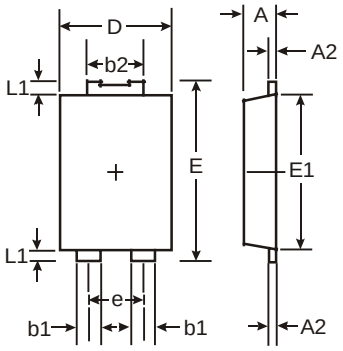

Dim	Min	Max
A	1.05	1.15
A2	0.33	0.43
b1	0.80	0.99
b2	1.70	1.88
D	3.90	4.05
D2	3.05 NOM	
E	6.40	6.60
e	1.84 NOM	
E1	5.30	5.45
E2	3.55 NOM	
L	0.75	0.95
L1	0.50	0.65
W	1.20	1.50
All Dimensions in mm		

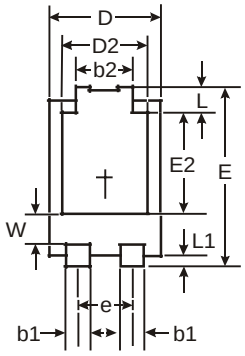

Diodes, Inc. patent-pending flat lead frame heat-sink solder pad results in higher power dissipation and surge capabilities in a compact low profile package

Product Highlights

- **PDS360, PDS560** and **PDS760:** Ideal for applications requiring lower forward voltage drop than what is available from 100 volt devices. A 60 volt breakdown voltage rating provides greater safe operating area for reverse mode operation than what is provided by 40 and 45 volt devices.
- **PDS4150:** Provides higher breakdown voltage than a 100 volt Schottky yet lower forward voltage drop than both 200 volt Schottky and 200 volt bipolar devices such as ultra-fast recovery rectifiers. This ideal combination results in more efficient operation.
- **PDS1045:** Provides a higher reverse breakdown voltage than PDS1040 or PDS1040L with forward voltage drop equal to PDS1040. Ideal for applications where PDS1040 doesn't offer quite enough margin on breakdown voltage or where the leakage current of PDS1040L is slightly too high.

Availability

- **Samples:** *Now* Available!
- **Production Quantity Lead Time:** 6 – 10 weeks
- **Data Sheets Available *NOW* at:** **www.diodes.com**

To download selected data sheet, enter p/n in our website Product Data Sheet search, or click**:**

PDS360 3 Ampere, 60V Schottky
PDS560 5 Ampere, 60V Schottky
PDS760 7 Ampere, 60V Schottky
PDS4150 4 Ampere, 150V Schottky
PDS1045 10 Ampere, 45V Schottky

PowerDI is a trademark of Diodes Incorporated.

Crosses to Other Manufacturers' Parts

Diodes' "New" PowerDI™5 products are compact, higher performance replacements for the following competitor products:

Diodes, Inc.	Vishay-GS		ON Semi		ST Micro		International Rectifier		Pan Jit	
P/N	P/N	Package	P/N	Package	P/N	Package	P/N	Package	P/N	Package
PDS360	SS36	DO-214AB (SMC)	MBRS360T3	SMC	STPS3L60U STPS3L60S	SMB SMC	30BQ060	SMC	SD360S/YS SK36	DPAK SMC
PDS560	N/A	N/A	N/A	N/A	N/A	N/A	--	--	SD560S/YS SK56	DPAK SMC
PDS760	MBRB760	DPAK	N/A	N/A	N/A	N/A	6CWQ06FN	DPAK	N/A	N/A
PDS4150	N/A	N/A	N/A	N/A	STPS3150U	SMB	N/A	N/A	N/A	N/A
PDS1045	--	--	--	--	--	--	--	--	N/A	N/A

Dimensional Highlights

- Low profile: Only 1.1mm tall, ideal for height limited applications.
  Compare with 2.3mm for SMC and DPAK, and 4.4mm for D^2PAK.
- Small footprint: Occupies only 23.8mm^2 of PCB area, which can be compared with:
  - 47mm^2 for SMC (PowerDI™5 consumes 49% less area than SMC)
  - 61.5mm^2 for DPAK (PowerDI™5 consumes 55% less area than DPAK)
  - 181.4mm^2 for D^2PAK (PowerDI™5 consumes 87% less area than D^2PAK).

Thermal Performance Benefits

- **Twice the Power Density of Competitive Package Types** --
  Highest power density package: 55mW/mm^2, which can be compared with:
  - 25mW /mm^2 for SMC
  - 28 mW /mm^2 for DPAK
- **Up to 50% Lower Thermal Resistance than Competitive Package Types** --
  Thermally efficient package: $R_{\theta JS}$ = 1.5 - 6.0^{o}C/W, which can be compared with:
  - 10 - 15°C/W for SMC
  - 2.4 - 6.0^{o}C/W for DPAK
  - 2.0 - 4.0^{o}C/W for D^2PAK

Solderability & Environmental Highlights

- RoHS Compliant
- "Green" (No Bromine, Antimony) Molding Compound
- Pb-Free, 100% Matte Tin Plating
- Withstands 260°C Solder Reflow
- Meets Moisture Sensitivity Level (MSL) 1

PowerDI is a trademark of Diodes Incorporated.

Applications

- Voltage Regulation / Conversion
- Motor Drives
- Catch Diode for Buck Regulators
- Freewheeling Diode
- Reverse Polarity Protection

End Equipment Applications

- Power Conversion
  - Notebook / Desktop SMPS
  - Adapters
  - DC / DC
- Servers / Networking
  - Synchronous Rectification / SMPS
- Industrial
  - Ballast
- Automotive
  - Broad-based Automotive Applications
  - HID Lighting
  - Engine Control Modules