New Product Announcement
July 2002

Introducing New High-Voltage Switching Diodes in SOT-23 Package: MMBD3004S

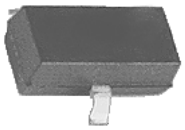

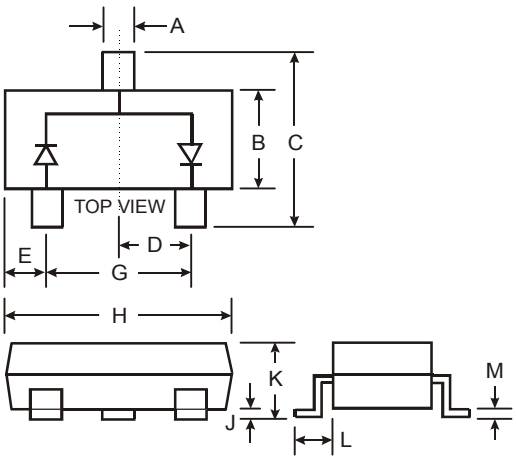

SOT-23		
Dim	**Min**	**Max**
A	0.37	0.51
B	1.19	1.40
C	2.10	2.50
D	0.89	1.05
E	0.45	0.61
G	1.78	2.05
H	2.65	3.05
J	0.013	0.15
K	0.89	1.10
L	0.45	0.61
M	0.076	0.178
All Dimensions in mm		

Key Features/Benefits

1. Highest breakdown voltage switching diode available, V_R = 350 Volts.
   -- Ideal for applications that require the highest breakdown voltage available.
   -- Lower voltage type available, MMBD2004S.
2. Low junction capacitance, C_j = 5.0 pF maximum, typical 1.0 pF at V_R = 0 Volts, f = 1.0 MHz.
   -- Ideal for high-speed data interfaces.
3. Fast switching speed, t_{RR} = 50 nS.
4. Dual series configuration.
5. Popular SOT-23 surface mount package.

Availability

- Samples *Now Available*
- Production Quantities stock to 6 weeks
- Data Sheet available NOW at: ***www.diodes.com***

  To download selected data sheet, enter selected part number in our website Product Data Sheet search field. Online viewers may click link: MMBD3004S

For more information, contact the Sales Department at
Diodes Incorporated Tel (805) 446-4800 / Fax (805) 446-4850 **www.diodes.com**

Applications

1. Rail-to-rail data line protection in one compact package.
2. Multiplexing circuits.
3. Bridge rectification circuits where PCB layout space is limited.
   -- Two MMBD3004S can be configured into a compact bridge rectifier requiring significantly less PCB space than a typical bridge rectifier.

End Equipment Applications

- Set top boxes
- Telephone systems
- High-speed modem systems
- Multiplexer
- PC switch mode power supply
- Electronic ballast

Crosses to Other Manufacturers' Parts

- No known equivalents on the market.
- Diodes MMBD3004S offers higher breakdown voltage. Nearest equivalent to the following:
  - General Semiconductor – GSD2004S
  - Central Semiconductor – CMPD2004S

Typical Application Schematics

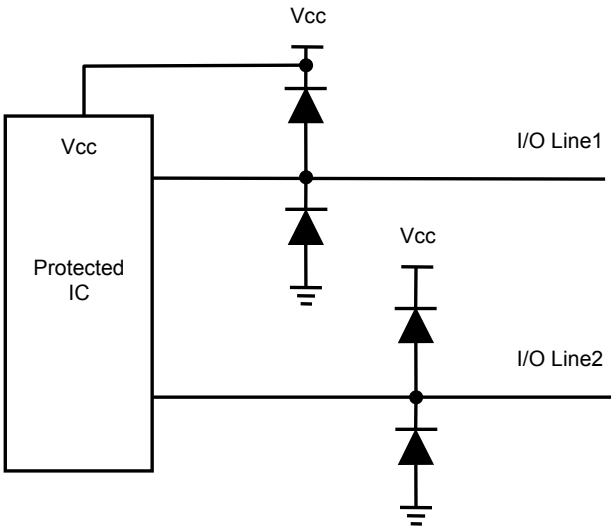

Figure 1. Typical Rail-to-Rail Protection

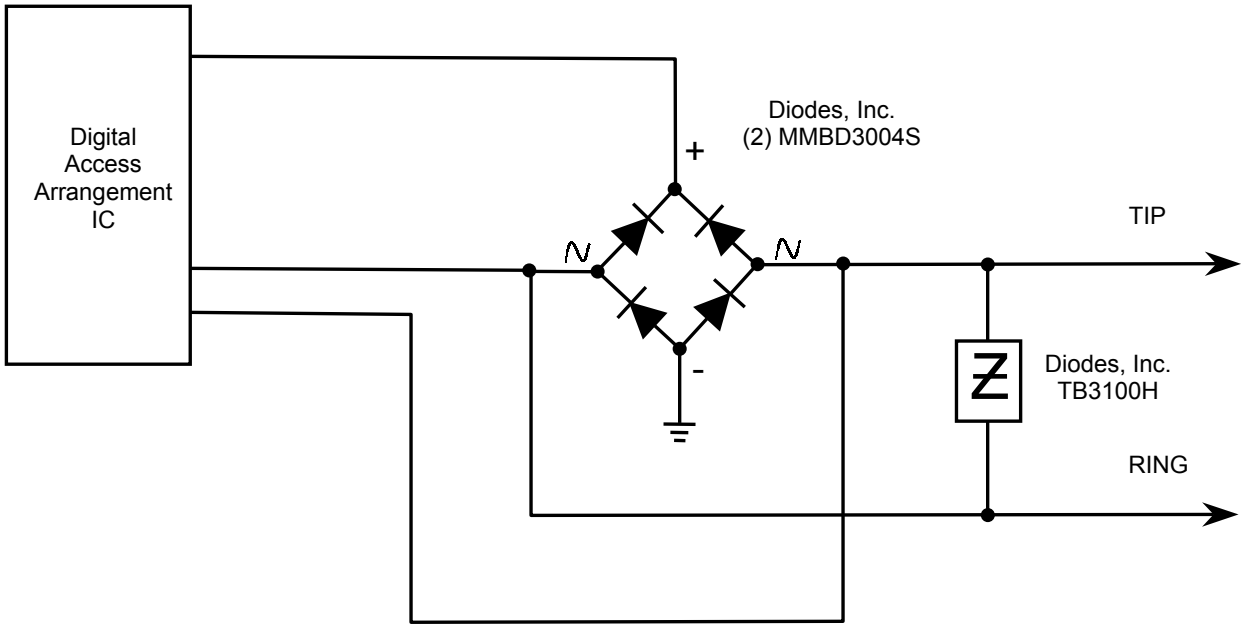

Figure 2. Typical Data Access Arrangement IC Application: this arrangement ensures the circuit will operate regardless of polarity on the tip and ring lines.